SECTIUNE A–A/SECTION A–A

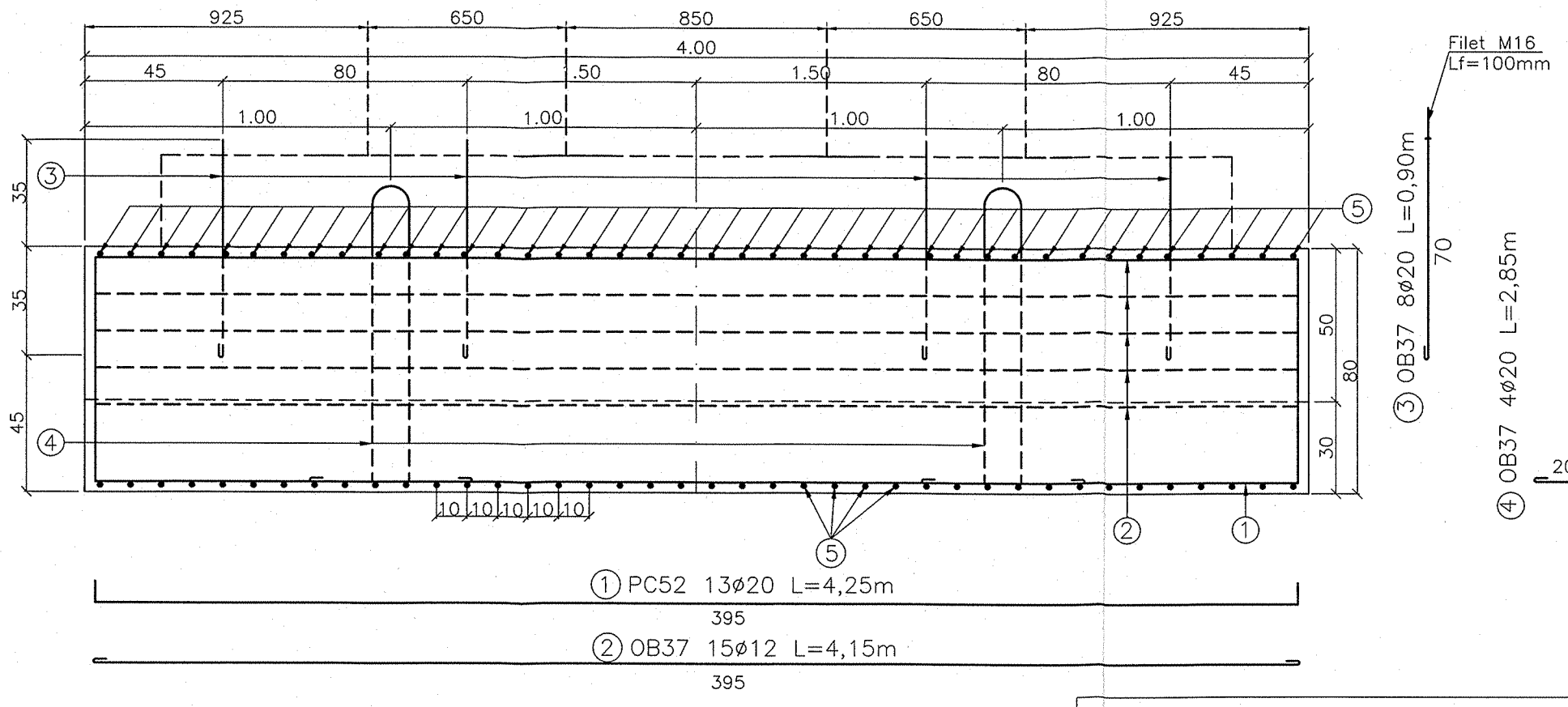

SECTIUNE B–B/SECTION B–B

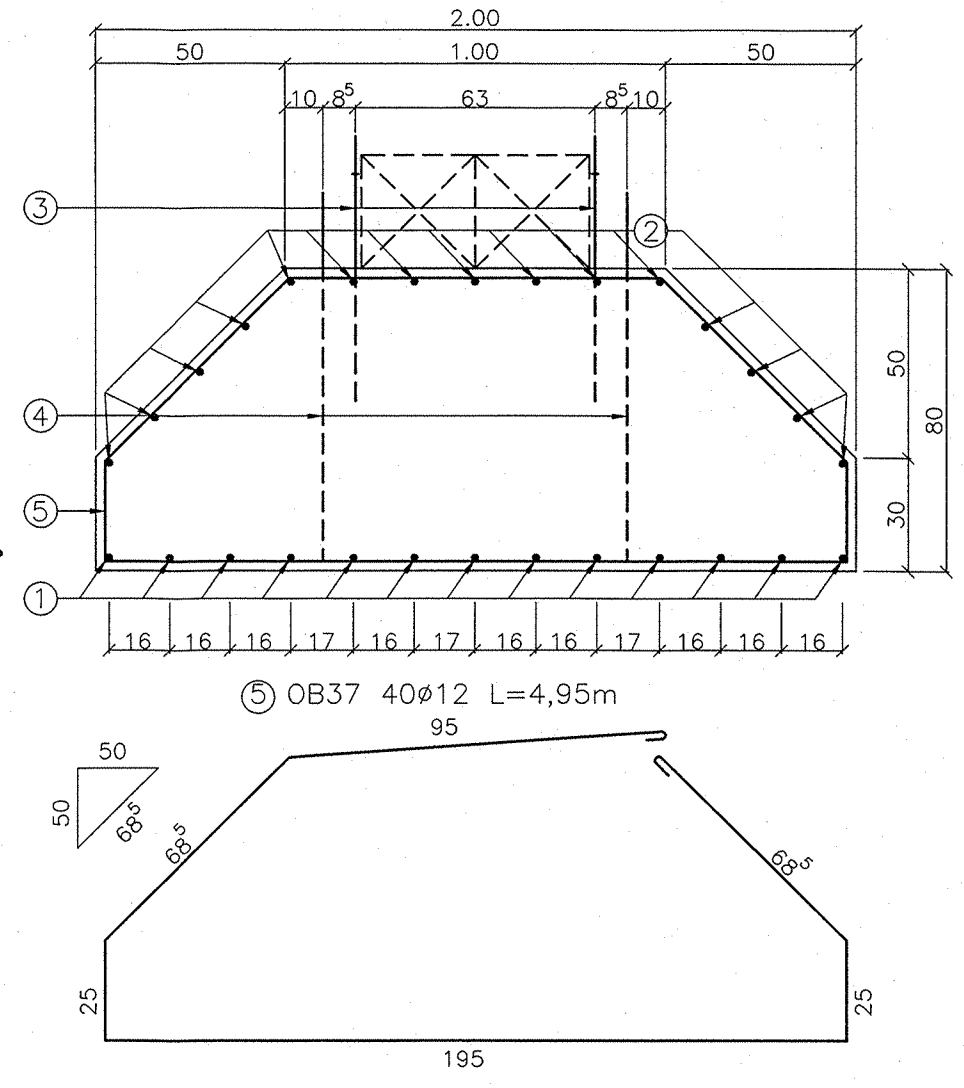

VEDERE PLANA/PLAN VIEW

CONVOI DE CALCUL/LOAD MODEL 0,9T8,5
VITEZA MAX./MAX. SPEED 30km/h

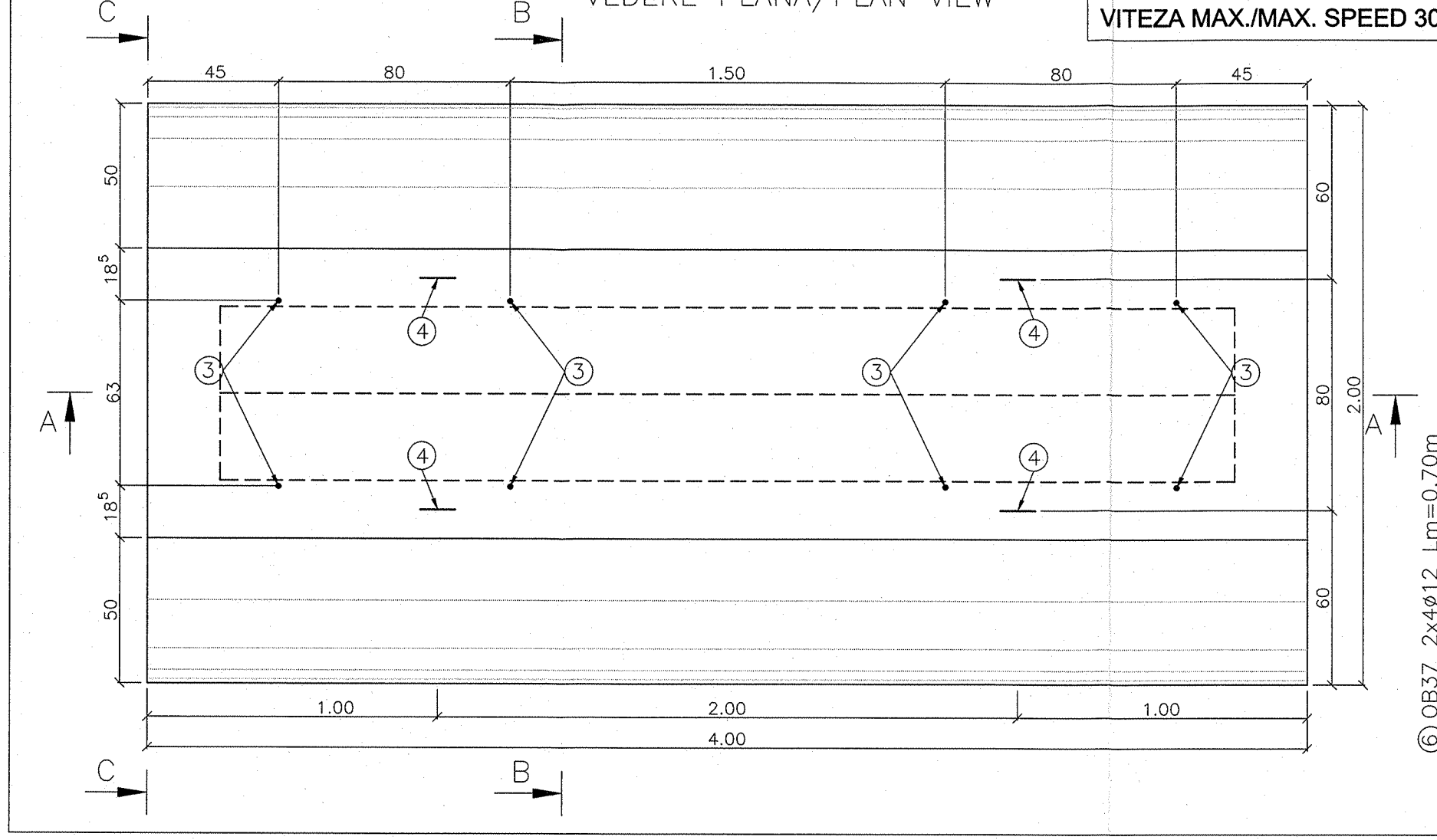

SECTIUNE C–C/SECTION C–C

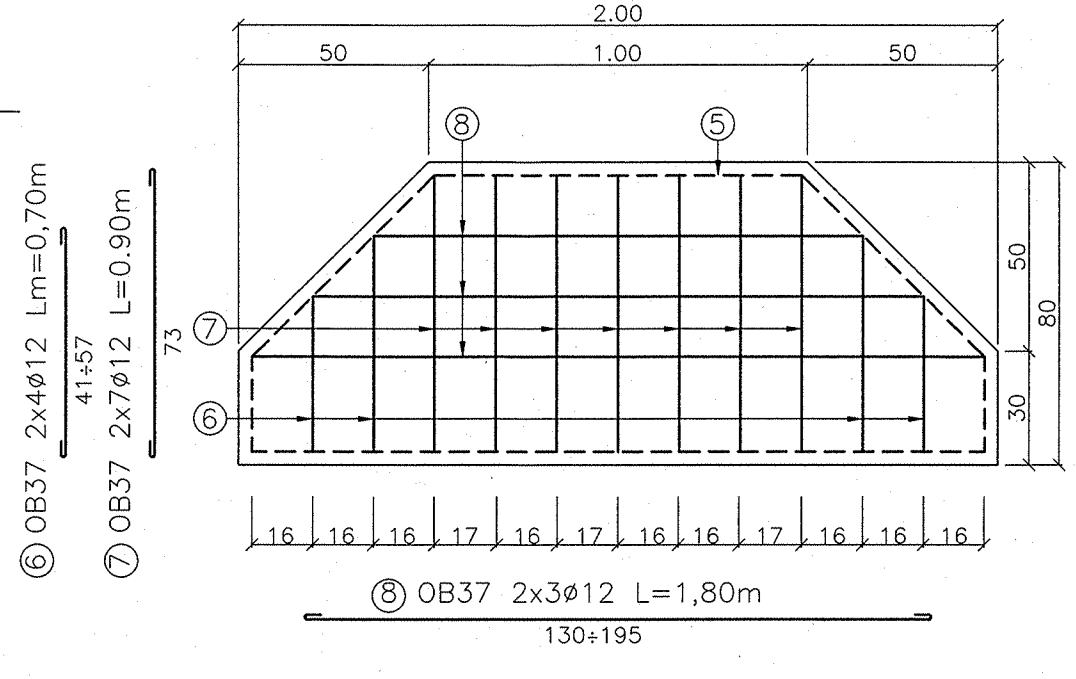

EXTRAS DE ARMATURA PENTRU O FUNDATIE
REINFORCEMENT TABLE FOR ONE FUNDATION

Marca/ Position	Diam.	Bucati/ Pieces	Lungime/ Length	Lungime/Diametru Length/Diameter OB 37 Ø12	OB 37 Ø20	PC52 Ø20
1	20	13	4.25			55.25
2	12	15	4.15	62.25		
3	20	8	0.90		7.20	
4	20	4	2.85		11.40	
5	12	40	4.95	198.00		
6	12	8	0.70	5.60		
7	12	14	0.90	12.60		
8	12	6	1.80	10.80		
Total Lungime/Diametru Total Length/Diameter				289.25	18.60	55.25
Greutate/Lungime (kg/m) Weight/Length (kg/m)				0.888	2.466	2.466
Greutate/Diametru (kg) Weight/Diameter (kg)				256.90	45.90	136.30
Greutate armatura (kg) Reinforcement weight (kg)				439.10		

Cofraj Formwork	18.75mp
Beton C16/20 Concrete C16/20	5.40mc
Greutate Weight	13.50t
Armatura Reinforcement	OB37, PC52
Piulite M16 Bolt nuts M16	8buc.
Acoperire beton Concrete cover	2.5cm

NOTA:
Aceasta fundatie prefabricata se va folosi ca reazem pentru podurile provizorii tip G12, G15 si G18.

NOTE:
This prefabricated foundation shall be used as support for the G12, G15 and G18 temporary bridges.

STANILĂ R. NICOLAE
ROMANIA MTCT
Nr. 06889
A4.B2.D
INGINER VERIFICATOR PROIECTE

B			
A			
	Data Date	Modificare Modification / Revision	

BENEFICIAR/ BENEFICIARY : AUTORITATEA DE IMPLEMENTARE/ IMPLEMENTUNG AUTHORITY
ROMANIAN RAILWAY NATIONAL COMPANY
Ministerul Transporturilor Ministry of Transports

AUTORITATEA CONTRACTANTA / CONTRACTING AUTHORITY
CFCU
Ministerul Economiei si Finantelor Oficiul de Plati si Contractare Phare
Ministry of Economy and Finances Phare Payments &Contracting Office

Contract / Contract: 1303/2007

prointec CONSIS PROIECT

Proiect finantat de UNIUNEA EUROPEANA
Project financed by EUROPEAN UNION
POS Transport 2007- 2013

Faza / Phase: PTH

Intocmit Designed	Ing.Viorel ALDESCU	Scara / Scale : 1:50	PORTOFOLIU DE PROIECTE PHARE CES 2005 / PHARE CES 2005 PROJECTS PORTFOLIO LOT 1
Verificat Checked	Ing. Bogdan SANDU	Data / Date : 05.2009	Asistenta tehnica pentru pregatirea unor lucrari de reabilitare pentru tuneluri si poduri de cale ferata Technical assistance for preparing rehabilitation works required by railway tunnels and bridges
Sef echipa Team leader	Ing. Stelian Vara-Oros		Denumire desen / Drawing Title : Sucursala RCF/Railway district BUCURESTI. Linia cf/Railway line Bucuresti-Videle Pod / Bridge km 21+084 FUNDATIE PENTRU PODURI PROVIZORII / FOUNDATION FOR TEMPORARY BRIDGES

Cod desen / Drawing Code: PD 5
Nr. / No: 14